6 Driver

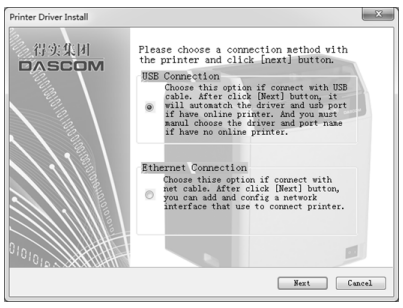

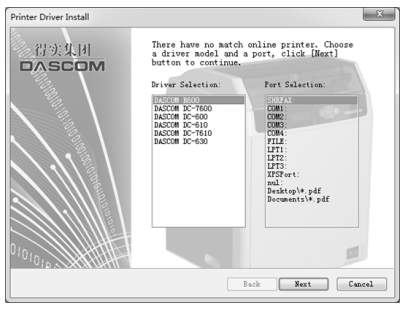

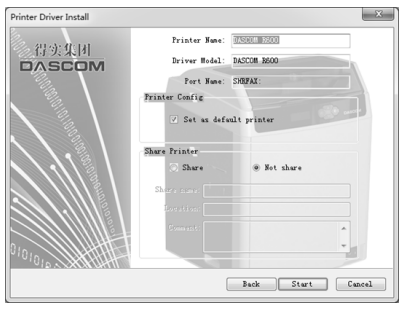

7 Cleaning Rolls

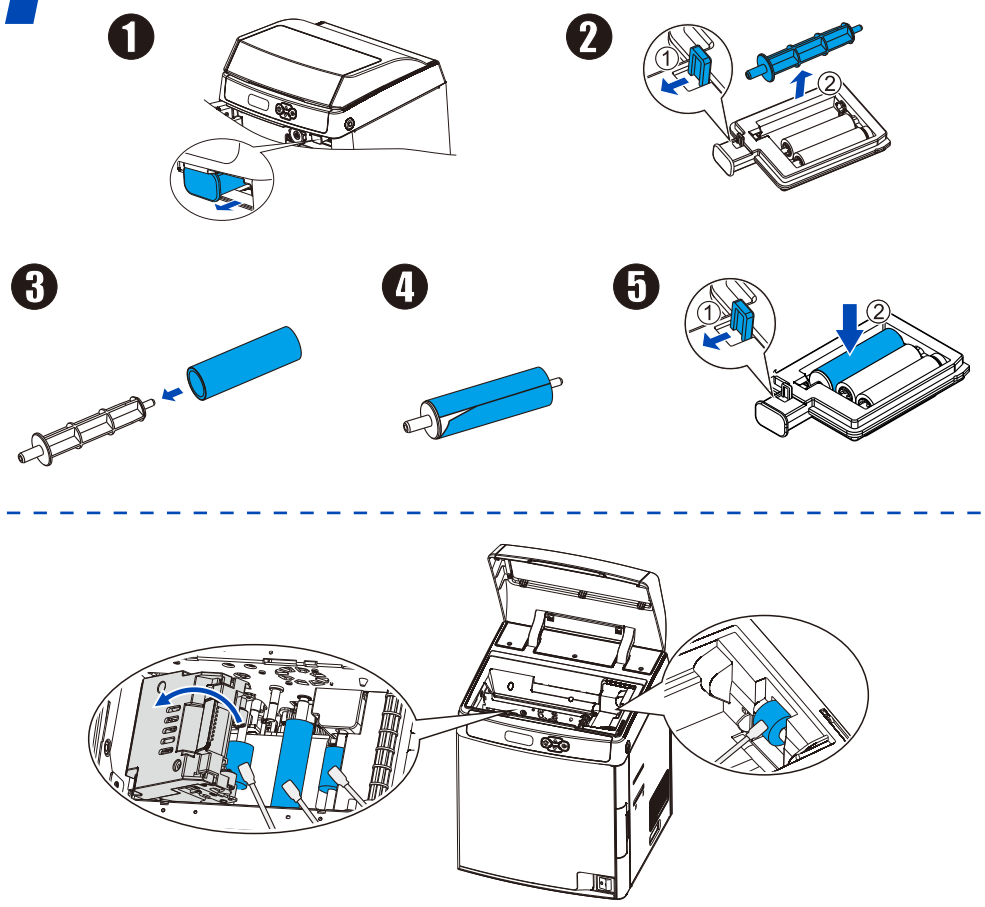

Questions

DC-7600 Card Printer

Installation Guide

DASCOM

EN

Installation guide
Please read the following instructions carefully before operating the printer. For detailed information and safety recommendations see the User Guide available at https://www.dascom.com/downloads.html

GE

Installationshandbuch
Lesen Sie bitte diese Hinweise durch bevor sie den Drucker in Betrieb nehmen. Ausführliche Informationen und Sicherheitsempfehlungen finden Sie im User Guide auf https://www.dascom.com/downloads.html

FR

Guide d'installation
Lire attentivement les instructions suivantes avant de mettre l'imprimante en service. Pour plus d'informations et de recommandations concernant la sécurité, merci de vous reportez-vous au manuel de l'utilisateur sur le https://www.dascom.com/downloads.html

IT

Guida di installazione
Prima di mettere in funzione la stampante, leggere attentamente le seguentiindicazioni. Per infommazioni dettagliate e suggerimenti sulla sicurezza consultareil manuale User Guide sul https://www.dascom.com/downloads.html

SP

Guía de instalación
Lea las siguientes instrucciones detalladamente antes de poner la impresora en funcionamiento. Para obtener información detallada y recomendaciones de seguridad consulte la Guía de Usuario disponible en https://www.dascom.com/downloads.html

RU

Руководство по установке
Прочтите, пожалуйста, инструкцию по технике безопасности перед включением в работу принтера. Подробная информация и инструкция по технике безопасности Вы найдете вруководстве пользователя по ссылке: https://www.dascom.com/downloads.html

PT

Guia de instalação
Leia atentamente as instruções a seguir antes de operar a impressora. Para informações detalhadas e recomendações de segurança, consulte o Guia do Usuário disponível em https://www.dascom.com/downloads.html

TR

Kurulum kılavuzu
Yazıcımızı çalıştırmadan önce, aşağıda belirtilen talimatların hepsini okuyunuz. Detaylı bilgi ve güvenli çalışma tavsiyeleri için, https://www.dascom.com/downloads.html linkinde bulunan kullanım kılavuzuna başvurunuz.

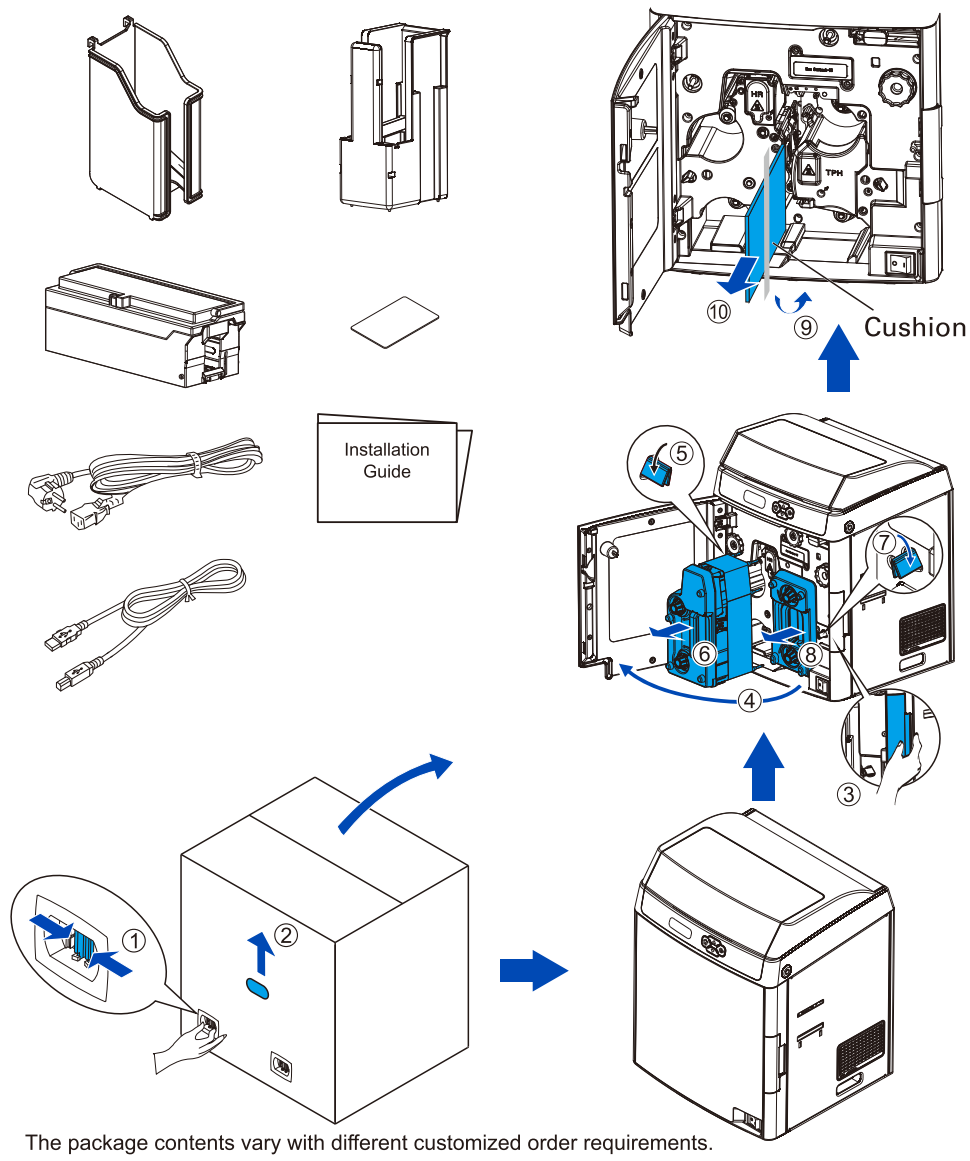

The package contents vary with different customized order requirements.

DASCOM REPRESENTATIVES:

DASCOM Europe GmbH,Heuweg 3,D-89079 Ulm,Germany
DASCOM GB Ltd,Hart House,Priestley Road,Basingstoke,Hampshire,RG24 9PU,England
DASCOM AP Pte Ltd 2 Jurong East Street 21#05-42,IMM Building,Singapore 609601
DASCOM Americas LLC,34 Lakeview Court,Verona,VA 24482,USA

Copyright © 2024 Dascom www.dascom.com

21.511.836.0073R

1 Ribbon

❶

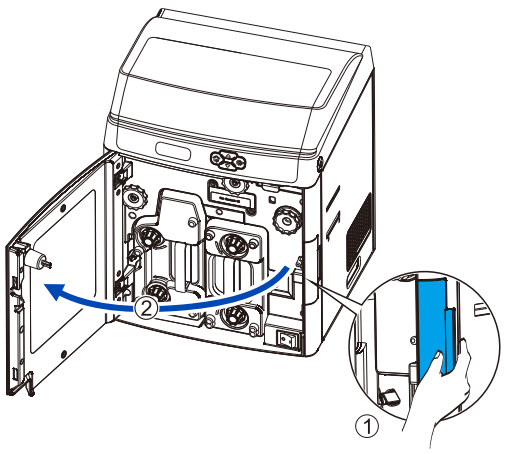

❷

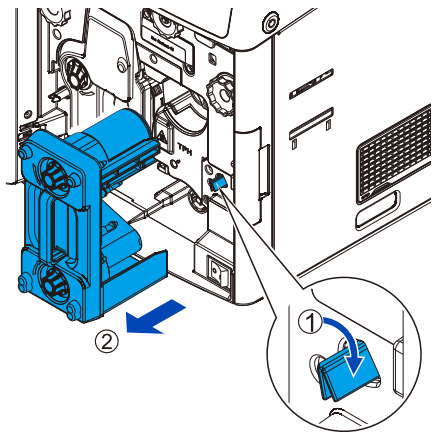

❸

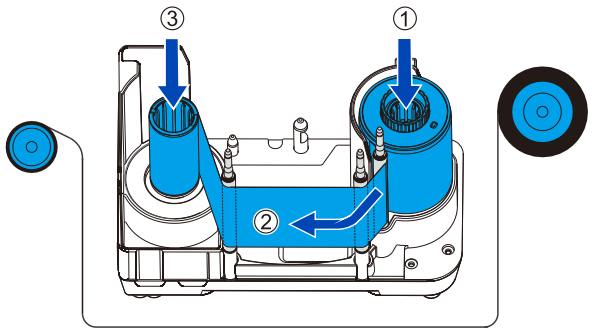

❹

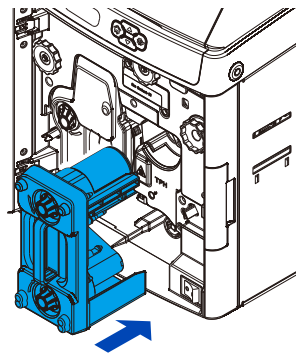

2 Film

❶

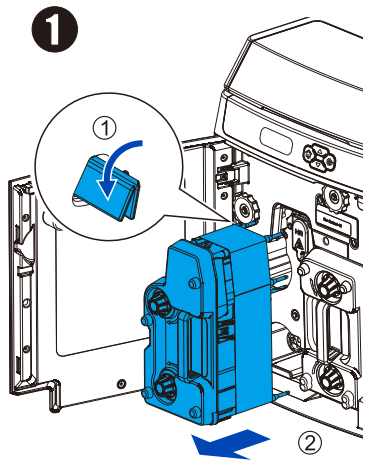

❷

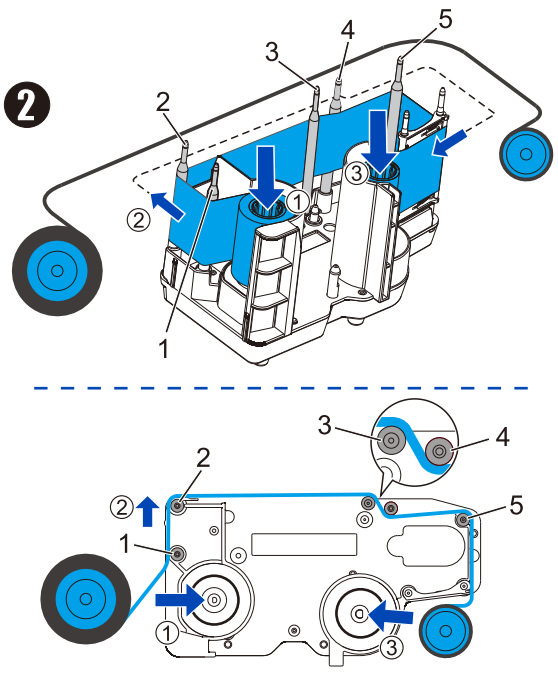

❸

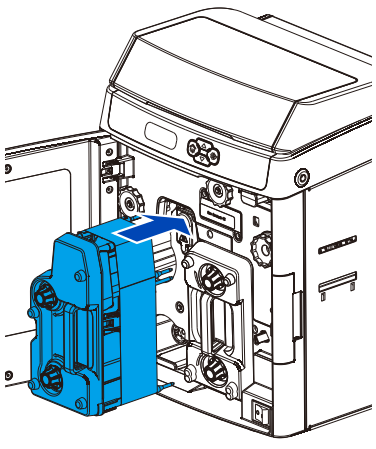

❹

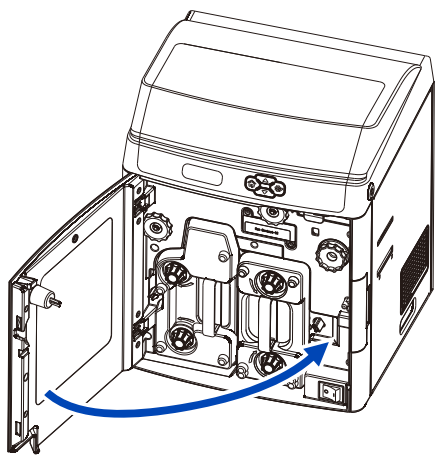

3 Card Input

❶

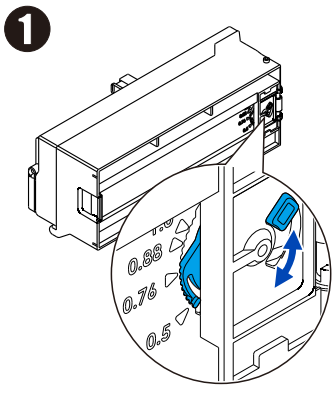

❷

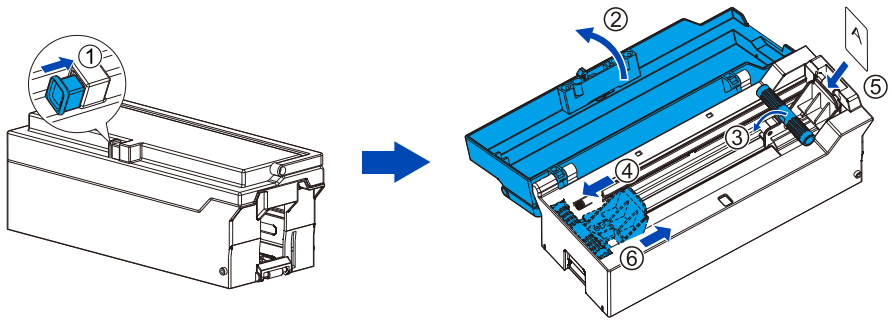

❸

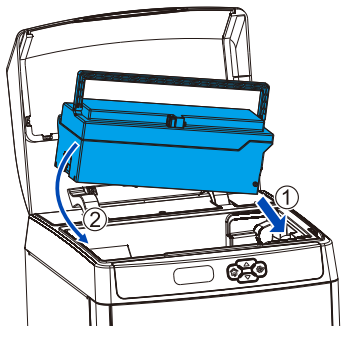

4 Card Output

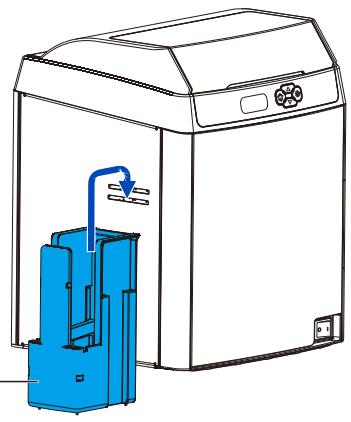

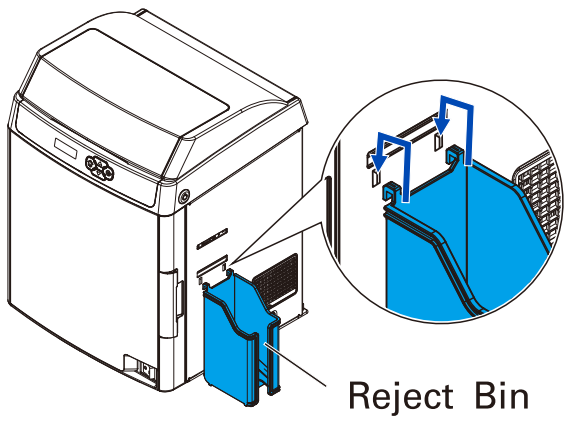
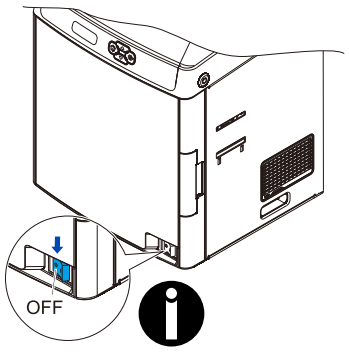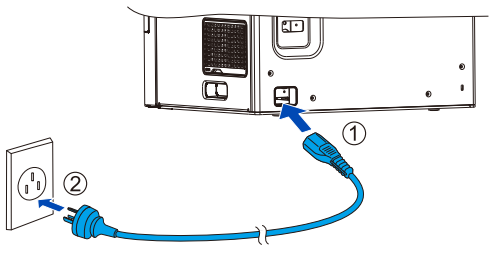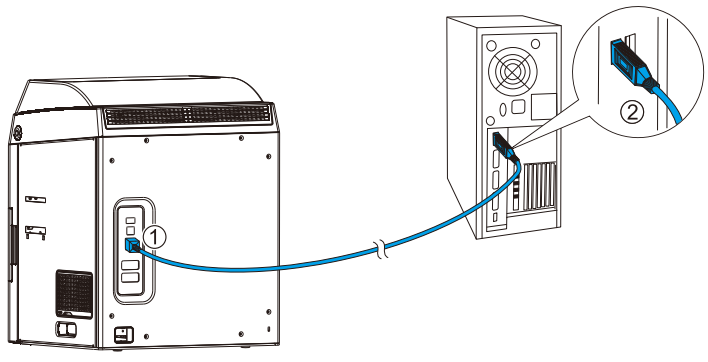
5 Power & USB